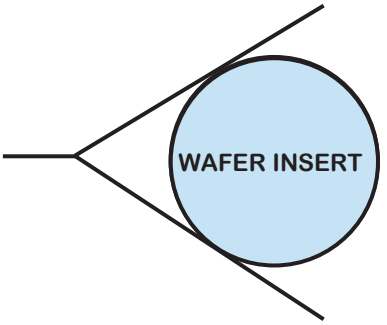

PED 2014/68/EU COMPLIANT
See Page 59 for Details

The **Wafer Insert (WV)** valve is designed to fit between two mating ANSI flanges. Two gaskets are required, instead of the one normally used in a flanged joint. The "drop in" valve body fits inside the bolt circle for quick installation and removal in rigid piping applications where the use of the F1, F6, or FP **(see our Flange Insert series on page 5)** is not practical. Many valves in this series can meet API 594 and/or B16.34 requirements. Consult the factory for more information.

The Wafer Insert valve can also be used as a low pressure relief valve or vacuum breaker by using the desired spring settings.

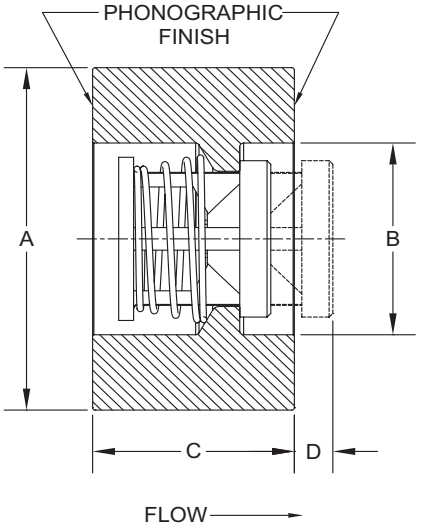

Nom. Pipe Size	Size Code	A	B	C	D ❷	Orifice Diameter
1/2	D	1-3/8	0.62	1.38	N/A	0.348
3/4	F	1-3/4	0.82	1.38	N/A	0.464
1	H	2	1.05	1.38	0.35	0.593
1-1/4	I	2-1/2	1.38	1.63	0.27	0.890
1-1/2	J	2-7/8	1.61	1.63	0.54	1.135
2	K	3-5/8	2.07	2.38	0.17	1.385
2-1/2	L	4-1/8❶	2.47	2.62	0.31	1.555
3	M	5	3.07	2.89	0.42	2.025
4	N	6-3/16	4.03	2.89	1.25	2.560

❶ Maybe Larger
❷ Maximum nominal dimension for a fully open valve with no spring.

Body Material❸	Nominal Pipe Size	Non-Shock Pressure-Temp. Rating
316 Stainless Steel (SS) Carbon Steel (CS) Alloy 20 (A2) Alloy C-276 (HC) Alloy B (HB) MONEL® 400 or Alloy R405 (MO) Titanium (TI)	1/2" - 1"	ANSI Class 150 - 2500 (1500 PSIG @ 100°F for o-ring seats)
	1-1/4" - 2-1/2"	ANSI Class 150 - 1500 (1500 PSIG @ 100°F for o-ring seats)
	3"	ANSI Class 150 - 900 (1500 PSIG @ 100°F for o-ring seats)
	4"	ANSI Class 150 - 600
Brass (BR)	1/2" - 4"	ANSI Class 150 - 300

❸ See page 58 for material grade information.

Note: All flow curves and Cv values presume the valves are fully open with 1/2 PSI cracking pressure springs. Consult the factory for more information.

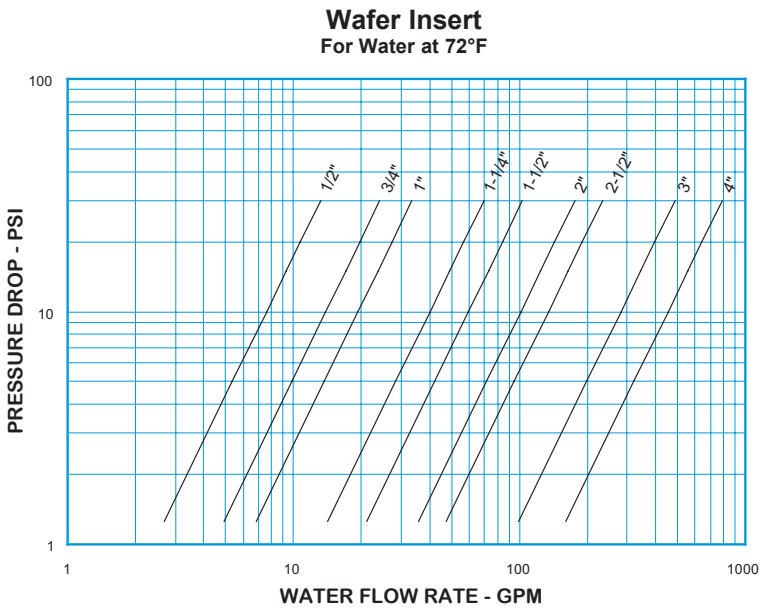

STYLE WV C_V VALUES & VALVE WEIGHTS			
C_V	SIZE	SS & CS	BRASS
2.4	1/2	9.5 oz.	10.2 oz.
4.4	3/4	12.6 oz.	13.5 oz.
6.1	1	1.0 lb.	1.1 lb.
12.7	1-1/4	1.8 lb.	1.9 lb.
18.8	1-1/2	2.4 lb.	2.5 lb.
32.0	2	5.2 lb.	5.6 lb.
42.5	2-1/2	7.2 lb.	7.7 lb.
89.0	3	11.4 lb.	12.4 lb.
144	4	17.2 lb.	18.4 lb.

See page 53 for Flow Formulae.
Valve weights are approximate.

HOW TO ORDER
CHECK-ALL STYLE WV

BODY MATERIAL

ALLOY 20 = A2
BRASS = BR
CARBON STEEL = CS
ALLOY B = HB
ALLOY C-276 = HC
MONEL® 400 OR ALLOY R405 = MO
316 SS = SS
TITANIUM = TI

See p. 3 for temperature ratings

SPRING CRACKING PRESSURES (PSI)

Must use decimal as a character unless selecting NO SPRING. *Specify Exact Setting*

SPRING RANGES		EXAMPLE
.000 TO .999	=	.500
1.00 TO 9.99	=	1.50
10.0 TO 85.0	=	15.0
NO SPRING	=	NOSPRG

STANDARD CRACKING PRESSURES ❶

.125 .500 1.50 3.50
(Sizes D-J Only)

Note: Many other cracking pressures are available. All spring tolerances +/- 15%.

SPECIAL OPTIONS

T = FEP ENCAPSULATED SPRING
See p. 4 for temperature rating
Contact the factory for more options

W	V													

VALVE STYLE

SIZE

1/2 = D
3/4 = F
1 = H
1-1/4 = I
1-1/2 = J
2 = K
2-1/2 = L
3 = M
4 = N

SEAT MATERIAL ❷

AFLAS® = AS
BUNA-N = BN
EPDM ❸ = EP
KALREZ® (FFKM) = KZ
FLUOREZ® (FFKM) = FZ
"METAL-TO-METAL" = MT
NEOPRENE = NE
PTFE = TF
FKM = VT

See p. 3 for temperature ratings

SPRING MATERIAL

316 SS = SS
ALLOY C-276 = HC
INCONEL X750® OR ALLOY X750 = IX
MONEL® 400 = MO
17-7PH SS = PH
TITANIUM = TI

See p. 4 for temperature ratings

Listed above are the most common material selections. Please contact the factory for additional options.

❶ .500 PSI is the only standard cracking pressure for spring materials other than Stainless Steel. 0.125 PSI springs are not recommended for installations with flow vertical down.

❷ Seat materials other than "metal-to-metal" have a maximum pressure rating of 1500 PSI. "Metal-to-Metal" and PTFE seats are not resilient. See page 54 for allowable leakage rates.

❸ EP seats not recommended for use with Carbon Steel valves.