PED 2014/68/EU COMPLIANT
See Page 59 for Details

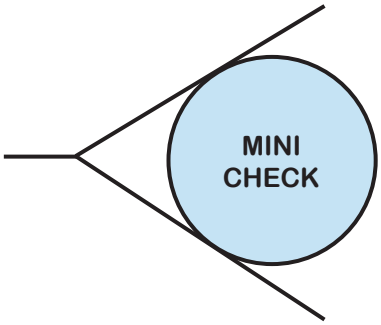

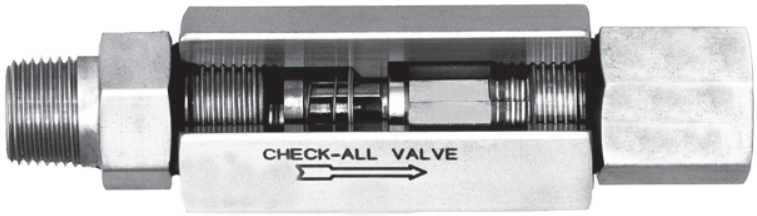

The **Mini-Check (M1 - M8)** is a check valve designed for minimum pressure drop. The three-piece construction permits many combinations of end fittings, which makes the valve adaptable for nearly every application. The Mini-Check is available with 1/8, 1/4, and 3/8 inch pipe threads, both male and female. It can also be supplied with a 1/8, 1/4, or 3/8 inch **tubing end** on one side and with a **pipe thread end** on the other. **Combinations** of male and female threads are also available. The Mini-Check can also be used as a low pressure relief valve or vacuum breaker by using the desired spring settings.

NOTE: Many valves in this series can be supplied with B16.34 certification. Consult the factory for more information.

M1 – Male pipe threads both ends.
M2 – Female pipe threads both ends.
M3 – Male pipe **inlet** – female pipe **outlet.**
M4 – Female pipe **inlet** – male pipe **outlet.**
M5 – Male pipe **inlet** – tubing **outlet.**
M6 – Female pipe **inlet** – tubing **outlet.**
M7 – Tubing **inlet** – male pipe **outlet.**
M8 – Tubing **inlet** – female pipe **outlet.**

NOTE: When ordering styles M5 through M8 be sure to specify whether **compression (-C) or 37° flare (-F).**

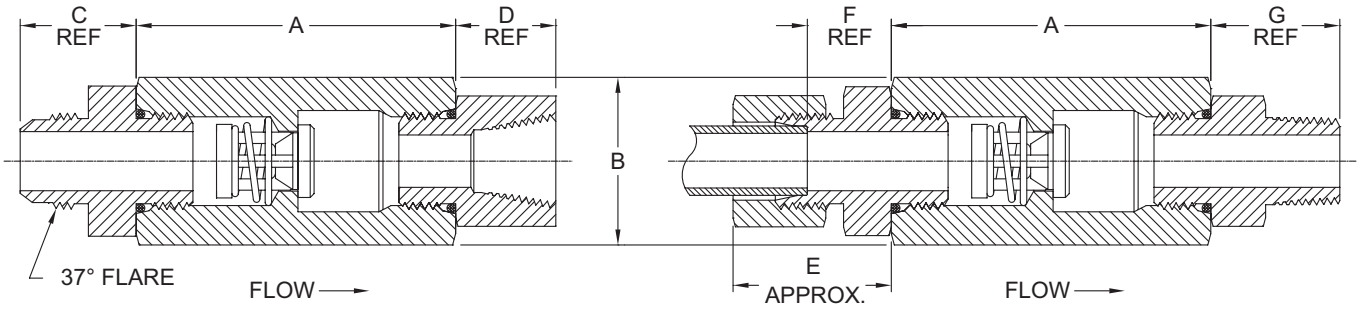

Nom. Pipe & Tube Size	Size Code	A	Hex Size B ❶	C	D	E	F	G	Orifice Diameter
1/8	A	2.16	7/8	0.75	0.71	0.93	0.11	0.73	0.348
1/4	B	2.16	7/8	0.92	0.84	1.23	0.57	0.85	0.348
3/8	C	2.48	1-1/8	0.92	0.91	1.32	0.59	1.03	0.464

❶ May be larger and/or round.

Body Material ❷	Non-Shock Pressure-Temp. Rating @ 100° F Consult factory for P-T rating above 100° F
316 Stainless Steel (SS)	5000 PSIG (1500 for o-ring seats)
Carbon Steel (CS)	
Brass (BR)	3000 PSIG (1500 for o-ring seats)

❷ See page 58 for material grade information.

Mini Check
For Water at 72°F

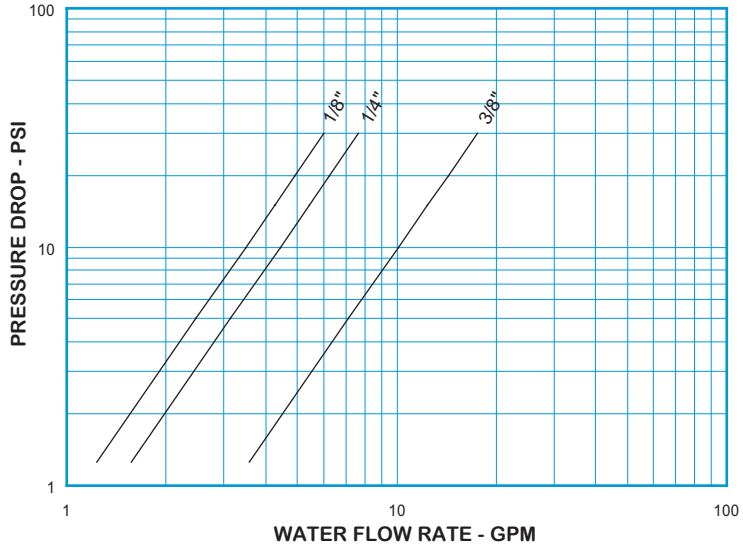

Note: All flow curves and Cv values presume the valves are fully open with 1/2 PSI cracking pressure springs. Consult the factory for more information.

STYLE M1-M8 C_V VALUES & VALVE WEIGHTS		
C_V	SIZE	ALL MATL
1.1	1/8	6.2 oz.
1.4	1/4	7.3 oz.
3.2	3/8	11.8 oz.

See page 53 for Flow Formulae.
Valve weights are approximate.

HOW TO ORDER
CHECK-ALL STYLE M1 - M8

SPRING CRACKING PRESSURES (PSI)
Must use decimal as a character unless selecting NO SPRING. *Specify Exact Setting*

SPRING RANGES		EXAMPLE
.000 TO .999	=	.500
1.00 TO 9.99	=	1.50
10.0 TO 85.0	=	15.0
NO SPRING	=	NOSPRG

STANDARD CRACKING PRESSURES ❶
.125 .500 1.50 3.50

Note: Many other cracking pressures are available. All spring tolerances +/- 15%.

BODY MATERIAL ❷
BRASS = BR
CARBON STEEL = CS
316 SS = SS
See p. 3 for temperature ratings

SPECIAL OPTIONS
T = FEP ENCAPSULATED SPRING
-O = Outer o-ring seals same as seat
See pages 3 & 4 for temperature rating
-C = Compression Tube (M5 - M8 only)
-F = Flared Tube (M5 - M8 only)

M

VALVE STYLE
M1
M2
M3
M4
M5
M6
M7
M8

SIZE
1/8 = A
1/4 = B
3/8 = C

SEAT MATERIAL ❸	STANDARD END FITTING O-RING MATERIAL
AFLAS® = AS	PTFE
BUNA-N = BN	BUNA-N
EPDM ❹ = EP	EPDM ❹
KALREZ® (FFKM) = KZ	PTFE
SIMRIZ® (FFKM) = SR	
"METAL-TO-METAL" = MT	SEE NOTE BELOW ❺
NEOPRENE = NE	NEOPRENE
PTFE (TF) = TF	PTFE
FKM = VT	FKM
See p. 3 for temp ratings	

SPRING MATERIAL
316 SS = SS
ALLOY C-276 = HC
ALLOY B = HB
INCONEL® X750 OR ALLOY X750 = IX
MONEL® 400 = MO
17-7PH SS = PH
TITANIUM = TI
See p. 4 for temperature ratings

Listed above are the most common material selections. Please contact the factory for additional options.

❶ .500 PSI is the only standard cracking pressure for spring materials other than Stainless Steel. 0.125 PSI springs are not recommended for installations with flow vertical down.

❷ Brass valves have plated Carbon Steel tube fittings if applicable. Consult factory if other fitting materials are desired.

❸ Seat materials other than "metal-to-metal" have a maximum pressure rating of 1500 PSI. "Metal-to-Metal" and PTFE seats are not resilient. See page 54 for allowable leakage rates.

❹ EP seats not recommended for use with Carbon Steel valves.

❺ Fitting o-rings are the same as the seat for standard seat materials. For "metal-to-metal" seated valves, end fitting o-rings are Buna-N for brass and carbon steel valves and FKM for stainless steel valves.